3 SERIES | POWERED STUDIO MONITORS

Owners Manual

JBL PROFESSIONAL by HARMAN

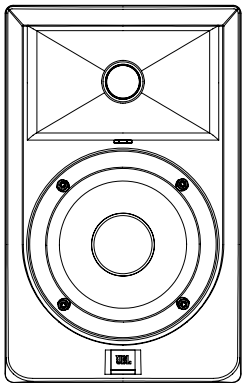

LSR**305**
5" Powered
Studio Monitor

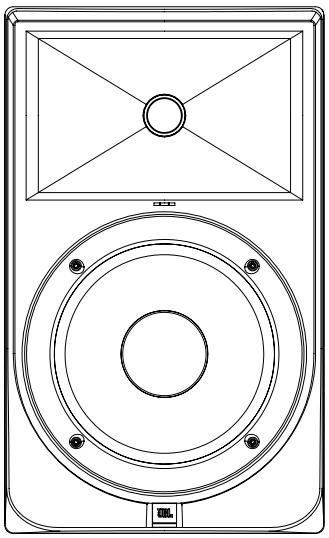

LSR**308**
8" Powered
Studio Monitor

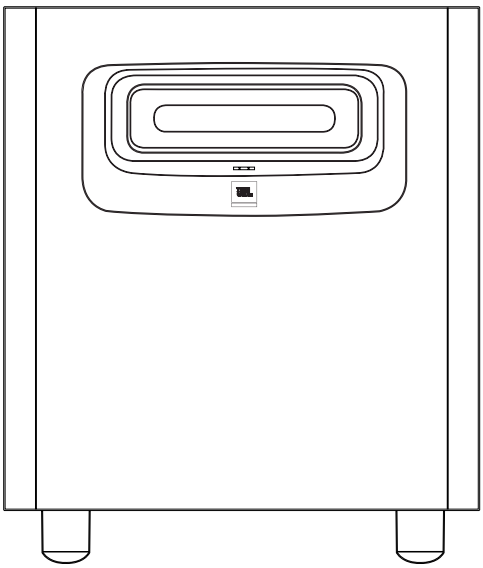

LSR**310S**
10" Powered
Studio Subwoofer

Thank you for your purchase of JBL 3 Series Studio Monitors

To receive important information as it becomes available
please take a moment to register your 3 Series speakers now.

Click the link or go to ***www.jblpro.com/3series***

Section 1: Important Safety Instructions

1. Read these instructions.
2. Keep these instructions.
3. Heed all warnings.
4. Follow all instructions.
5. Do not use this apparatus near water.
6. Clean only with dry cloth.
7. Do not block any ventilation openings. Install in accordance with manufacturer's instructions.
8. Do not install near any heat sources such as radiators, heat registers, stoves or other apparatus that produce heat.
9. Do not defeat the safety purpose of the grounding type plug. A polarized plug has two blades with one wider than the other. A grounding type plug has two blades and a third grounding prong. The wide blade or the third prong is provided for your safety. If the provided plug does not fit into your outlet, consult an electrician for replacement of the obsolete outlet.
10. Protect the power cord from being walked on or pinched particularly at plugs, convenience receptacle and the point where the power cord connects to the apparatus.
11. Only use attachments/accessories specified by the manufacturer.
12. Unplug this apparatus during lightning storms or when unused for long periods of time.
13. Refer all servicing to qualified service personnel. Servicing is required when the apparatus has been damaged in any way, including: power-supply cord or plug is damaged, liquid has been spilled or objects have fallen into the apparatus, the apparatus has been exposed to rain or moisture, does not operate normally, or has been dropped.
14. The appliance coupler of the power supply cord is used as the ultimate disconnect device from the mains. The appliance coupler shall remain readily operable.
15. The apparatus shall be connected to mains socket outlet with a protective earthing connection.

WARNING:

- To reduce the risk of fire or electrical shock, do not expose the apparatus to rain or moisture.
- The apparatus shall not be exposed to dripping or splashing and no objects filled with liquids, such as vases, shall be placed on the apparatus. As with any electronic product, use care not to spill liquids into any part of the system. Liquids can cause a failure and/or a fire hazard.

Explanation of Graphic Symbols

The exclamation point within an equilateral triangle is intended to alert the users to the presence of important operating and maintenance (servicing) instructions in the literature accompanying the product.

The lightning flash with the arrowhead symbol, within an equilateral triangle, is to alert the user to the presence of insulated "dangerous voltage" within the products enclosure that may be of sufficient magnitude to constitute a risk of electric shock to humans.

DO NOT EXPOSE TO RAIN OR MOISTURE!

CAUTION: TO REDUCE THE RISK OF ELECTRONIC SHOCK - DO NOT REMOVE COVER. NO USER SERVICEABLE PARTS INSIDE. REFER SERVICING TO QUALIFIED PERSONNEL. DO NOT EXPOSE THIS APPARATUS TO RAIN OR MOISTURE.

Any changes or modifications not expressly approved by the party responsible for compliance could void the user's authority to operate the equipment.

This equipment has been tested and found to comply with the limits for a class B digital device, pursuant to part 15 of the FCC Rules. These limits are designed to provide reasonable protection against harmful interference in a residential installation. This equipment generates, uses and can radiate radio frequency energy and, if not installed and used in accordance with the instructions, may cause harmful interference to radio communications. However, there is no guarantee that interference will not occur in a particular installation. If this equipment does cause harmful interference to radio or television reception, which can be determined by turning the equipment off and on, the user is encouraged to try to correct the interference by one or more of the following measures:

- Reorient or relocate the receiving antenna.
- Increase the separation between the equipment and receiver.
- Connect the equipment into an outlet on a circuit different from that to which the receiver is connected.
- Consult the dealer or an experienced radio/ TV technician for help.

CAN ICES-3(B)/NMB-3(B)

Contents

Important Safety Instructions 3

Introduction 5-6

Setting Up Your System 6

What's Included? 6

Unpacking 6

Placement 7

Audio Connections 8

Power Connections 8

Making Sound 9

LSR305 and LSR308 Powered Studio Monitors

Front and Rear Views 10

Input Panel 11

Audio Connections 11

LSR310SP Powered Studio Subwoofer

Front and Rear View 12

Input Panel 13

Audio Connections 13

Setting Subwoofer Level 14

Placement and Polarity 14

XLF, Extended Low Frequency Setting,
Crossover Settings and Bass Management 14

Surround Sound and .1 LFE Channel 15

Systems Connections 16-17

Trouble Shooting 18

Specifications 19

JBL Service Contact Information 20

Product Warranty Information 21

Section 2: Introduction

Congratulations on your purchase of JBL Professional 3 Series Studio Monitors. These studio monitors and Subwoofer meet JBL's high standards for accuracy and long-term reliability in demanding professional applications. All 3 Series models incorporate JBL Professional transducer and network technologies to provide accurate frequency response, exceptional low frequency extension and high SPL capability. JBL LSR Linear Spatial Reference design ensures greater accuracy at the mix position in acoustically varied work spaces and production environments. Additionally, each speaker is equipped to interface with a range of signal sources including high-output professional equipment.

JBL LSR Linear Spatial Reference Design

Because listening environments vary, JBL designed the 3 Series system using LSR Linear Spatial Reference design criteria that improve accuracy at the listening position in a broad range of rooms. The key to accuracy is ensuring not just the on-axis sound, but also the reflected sound reaching the mix position is neutral. While most manufacturers take only a single on-axis measurement of the speaker's performance, Linear Spatial Reference design criteria requires 72 measurements, 360 degrees around the speaker, yielding 1,200 times more data. This data is used in the design of critical system components, enabling JBL to engineer complete systems that deliver smooth off-axis response. The result: clear accurate sound at the listening position in any room.

3-Series Image Control Waveguide

JBL's revolutionary Image Control Waveguide gives the LSR305 and LSR308 remarkable imaging, a wide sound-stage, and a solid "phantom center." Subtle details can be heard, even in a dense mix. As an added benefit, incorporating this waveguide, 3-Series models give you a broad "sweet-spot" in your work space, so you don't have to be seated directly in front of the speakers to hear accurate, natural and open sound.

3 Series models include a range of features to meet the needs of demanding audio production applications. LSR305 and LSR308 models include:

- Low frequency magnetically-shielded transducers, equipped with 1.5" voice coils and robust motor structures to provide excellent low frequency performance. By reducing thermal-related effects, the 3 Series Studio Monitors and Subwoofer sound the same at low, medium and high levels. The woofers are magnetically shielded to prevent interference with magnetically sensitive displays and equipment. The woofer's self-repairing dust dome is resistant to dents caused by fingers or external objects.
- JBL's Patented Slip Stream™ low frequency port design that works in concert with the woofer to produce deep bass response at all playback levels. The double-flared shape of the port is precisely engineered for greater low-frequency extension and reduced turbulence.
- Bi-amplified Design with individual power amplifiers for the Low Frequency and High Frequency Transducers. The design utilizes efficient high-output Class D integrated power amplifiers to provide high SPL (Sound Pressure Level) for demanding production applications.
- Soft dome magnetically-shielded high-frequency transducers with optimally damped materials to improve transient response and minimize distortion. By reducing distortion in the lower operating range, where the ear is most sensitive, these transducers reduce ear fatigue.
- Balanced XLR and 1/4" connectors, a dented level attenuator to allow interface to a broad range of signal sources. The +4 dB / -10 dB input sensitivity switch allows connection of the speakers to high-output professional equipment without danger of input overload.
- High Frequency and Low Frequency Trim controls in the LSR308 and LSR305 allow adjustment of frequency response to preference, or to compensate for acoustically reflective or absorptive listening environments.

Producing extended low frequency into the 20 Hz region, the LSR310S is the perfect match for the LSR305 and LSR308 Studio monitors. The LSR310S feature set includes:

- A custom designed down-firing, High-Excursion 10" woofer with an additional bucking magnet.
- 200 Watts Class D Power Amplifier with abundant output and dynamic headroom for the most demanding production styles.

- Patented Slip Stream Port – The patented JBL low frequency port design works in concert with the 3 Series woofer for accurate bass response at all playback levels.
- A detented volume control makes it easy to balance of the LSR310S in your studio monitor system.
- Balanced XLR and 1/4" inputs and XLR outputs you can add the LSR310S to any studio monitor system to extend its low frequency performance, or use it as the ".1" LFE Channel in a surround sound system.
- The -10 dBV/+4 dBu sensitivity switch ensures compatibility with a broad range of signal sources, allowing you to connect the LSR310S to high-output professional equipment without any danger of input overload.
- Three Crossover settings: 80 Hz, XLF, External
    - The 80 Hz setting implements high and low pass filters to create a seamless blend of the LSR310S with JBL's LSR305 or LSR308 studio monitors or models from other manufacturers.
    - The external setting bypasses all filtering, allowing use of an external crossover.
    - The special XLF setting activates a 120 Hz High Pass Filter in conjunction with a low frequency tuning that approximates the tuning used in club playback systems. Using this setting, the bass output more than doubles.
- A protective limiting circuit allows the subwoofer to operate continuously at full output without failure.

JBL Professional Reliability
Prior to becoming a production-ready design, each 3 Series model is subjected to JBL's tough 100-hour power test, in which the speaker is required to play continually at full output for 100 hours without failure. This demanding test ensures your 3 Series speakers will deliver years of reliable performance. To get the most out of your JBL 3 Series, please review this owner's manual and keep it on hand for future reference. Also, please register your new speakers at ***www.jblpro.com/registration***.

Section 3: Setting Up Your System

Each 3 Series box includes the following items:

- One 3 Series Studio Monitor or Subwoofer
- One Power Cord
- Quick Set Up Guide
- LSR308 and LSR305 include peel-off rubber pads

UNPACKING

When removing a speaker from its packaging, we recommend the following procedure, which will prevent damage of the high frequency transducer located near the top of the cabinet on the front of the speaker: LSR305 and LSR308:

- Remove the outer shipping carton, if one exists.
- Place the inner carton on the floor with the top facing upwards.
- Open the top of the box.
- Without removing the internal packaging end-cap, gently rotate the carton so the open end rests on the floor and the bottom of the carton is facing you.
- Gently lift the carton allowing the speaker and protective end-cap to slide out of the carton and remain on the floor.
- Save the cartons and use the above procedure in reverse when you want to repack the units for shipment.

LSR310S Subwoofer - The subwoofer weighs 19 kg (42 lbs.) Unpacking the subwoofer does not require you lift the subwoofer. However, you will need to rotate the subwoofer in the carton. If you are unable to perform the following steps without assistance, please request help from another person.

- Remove the outer shipping carton, if one exists.
- Place the carton on the floor with the bottom facing upward.
- Open the bottom flaps of the carton and remove any protective packing materials from the bottom of the subwoofer. Open the bag that protects subwoofer, exposing the subwoofer's four feet.
- Gently rotate the carton so the bottom of the carton is facing the floor and the four feet of the subwoofer are in contact with the floor.
- Gently lift the carton allowing the subwoofer and protective packing materials to slide out of the carton and remain on the floor.
- Remove the protective packing materials and documentation from the top of the subwoofer. Save the cartons and use the above procedure in reverse when you want to repack the units for shipment.

PLACEMENT

3 Series speakers are designed to deliver exceptional imaging in any room. To get the most out of your speakers, follow these recommendations:

- Locate the four self-adhesive rubber pads supplied with LSR305 and LSR308 speakers. Position and attach these to the bottom surface of the speaker close to each corner.
- Position each LSR305 and LSR308 speaker in a vertical orientation with the tweeter on the top. Vertical orientation eliminates phase shift and cancellation of frequency response that occurs when the distance of the woofer to the ear is different from the distance of the tweeter to the ear.
- Angle the speakers so the high-frequency transducer in each speaker is aimed directly towards the ear of the listener.
- Ideally, LSR305 and LSR308 Series speakers should be placed on suitable speaker stands, rather than on the work surface. This will reduce resonance and deterioration of low frequency performance that occurs through the speaker's mechanical coupling with the work surface.
- For optimum imaging, the left speaker and the right speaker should be placed symmetrically in the room, so each speaker is the same distance from adjacent walls and reflective surfaces.
- The speakers should be placed so the position of the listener and the two speakers form an equilateral triangle. Adjusting the distance between the speakers will affect the quality of bass heard at the listening position. You can experiment with speaker placement to find the placement that produces the preferred bass response, imaging and when listening to stereo material, produces a strong "phantom" center in which vocals and some instruments seem to originate from a point between speakers.
- The listening distance can be determined according to your preference, the acoustics of your room and the maximum SPL (Sound Pressure Level) you want to hear at the listening position. You can find the speaker's maximum SPL at 1 Meter in the Specifications Section at the end of this manual. Each doubling of listening distance will reduce the SPL at the listening position by 6 dB in an acoustically absorptive room, but only 3 or 4 dB in an acoustically reflective room.

LSR310S Subwoofer placement: The low frequency driver of the 310S is mounted on the bottom panel of the subwoofer. Before placing the subwoofer, make sure the position on the floor is free of any large objects that can interfere with or damage the woofer. In a stereo system, The LSR310S Subwoofer should be placed directly on the floor, located between the Left and Right Speakers. In a surround sound system, the subwoofer can be located between the Left and Center or between the Right and Center channel Speakers. The distance of the subwoofer from the listening position can be adjusted to produce the optimum balance of bass in the system. Placing the subwoofer close to a wall or in a corner generally will increase the amount of bass heard in the room. Experiment to determine the Subwoofer placement that produces the best balance and quality of bass in the system.

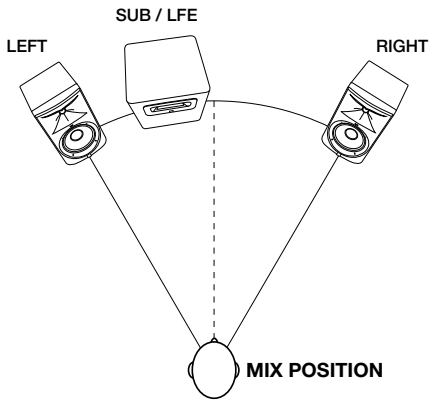

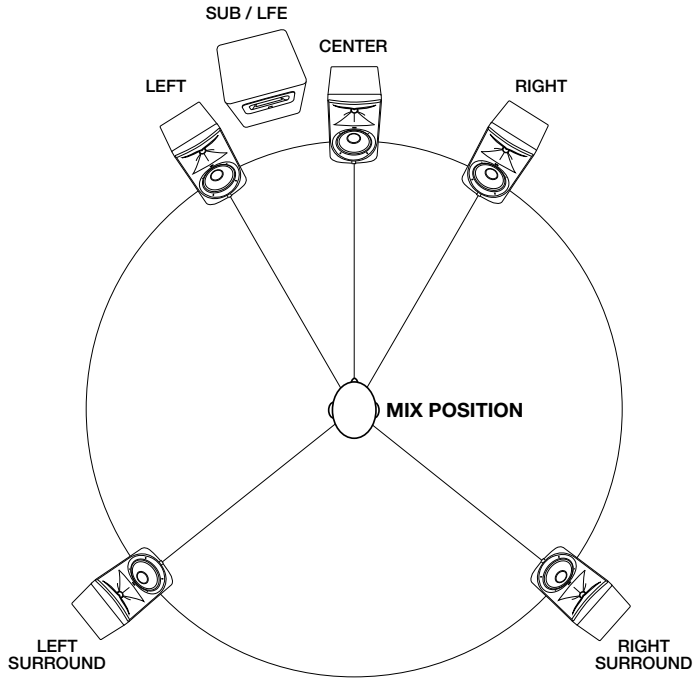

AUDIO CONNECTIONS

The 3 Series Speakers are equipped with balanced XLR and 6 mm (¼") TRS inputs for connection to professional computer audio interfaces, mixing consoles and audio production equipment as well as unbalanced consumer audio products including personal music players, consumer audio receivers and audio visual equipment. Connect professional equipment with balanced outputs to the XLR or 6 mm (¼") TRS input of the speaker using balanced signal cables.

3-Series speakers are equipped with an INPUT SENSITIVITY SWITCH. The switch is set to the -10 dBV setting when it ships from our factory. This setting will be best for many applications. However, you can set the switch to the +4 dBu setting:

- When connecting 3 Series speakers to professional equipment with +4 dBu nominal output level, set the INPUT SENSITIVITY SWITCH to the +4 dBu setting. To determine the nominal output level of the connected equipment, consult the documentation supplied with the connected equipment.
- If you notice the sound is distorted, set this switch to the +4 dBu setting.
- When using the LSR310S in a system with the LSR308 or LSR305 studio monitors, set the INPUT SENSITIVITY switch on the LSR305 or LSR308 to the -10dBV setting regardless of the LSR310S input sensitivity switch setting.

LSR310S Subwoofer connections

The left and right outputs of the signal source should be connected directly to the LEFT and RIGHT INPUTS of the subwoofer. The LEFT and RIGHT OUTPUTS of the subwoofer should be connected to the inputs of the left and right speakers respectively.

POWER CONNECTIONS

The 3 Series speakers incorporate a universal power supply allowing these to be used domestically and internationally. The ground terminal of the IEC plug is required by wiring codes and regulations and must always be connected to the electrical installation safety ground.

MAKING SOUND

After connections are made, reduce the output level of the audio source (mixing console, computer recording system, or preamp) to minimum. Set the 3 Series POWER SWITCH to the “ON position.” After a short delay the POWER INDICATOR on the front of each speaker will illuminate and the speakers will be ready to reproduce audio signals. Power-on connected audio equipment, and slowly advance the volume control of connected audio equipment to achieve a suitable listening level. Balance the subwoofer in the system using the rear panel VOLUME CONTROL on each speaker. Additional balance of bass can be achieved by adjusting the placement of the subwoofer in the room.

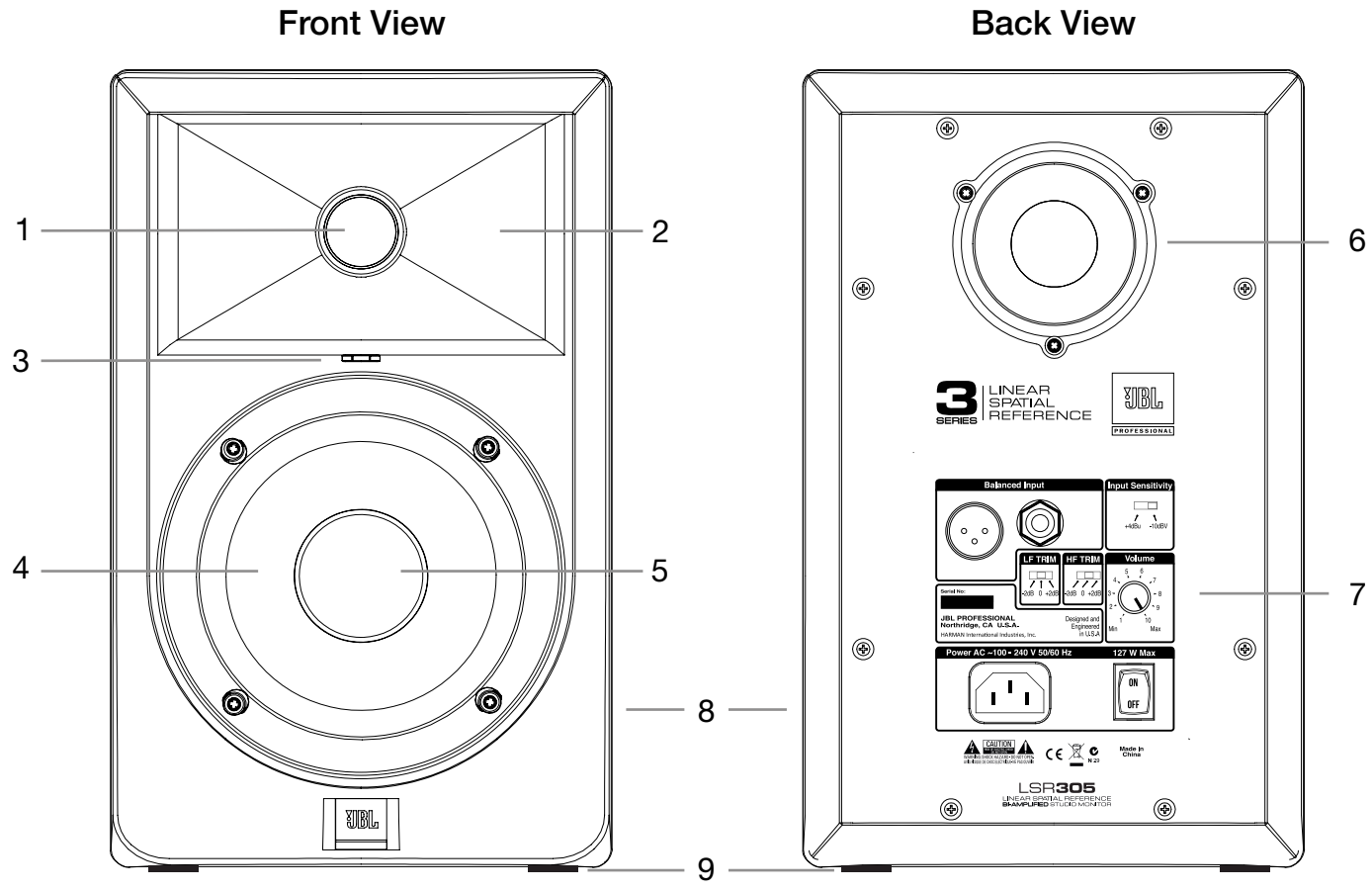

FEATURES

1. **HIGH FREQUENCY TRANSDUCER** (Tweeter) – Reproduces high frequency signals.
2. **WAVEGUIDE** – The specially designed Image Control Waveguide enhances imaging and optimizes the blend of direct and reflected sound in the room, ensuring neutral sound at the mix position.
3. **POWER INDICATOR** - Illuminates when power is connected and the POWER SWITCH is set to ON. Note after setting the power switch to ON, there is a short delay prior to illumination of the LED.
4. **LOW FREQUENCY TRANSDUCER** (Woofer) – Reproduces low frequency content of the input signal.
5. **DUST DOME** - Protects the inner circuit of the woofer. This self-repairing dust dome is resistant to dents caused by fingers and objects.
6. **LOW FREQUENCY PORT** – The patented Slip Stream™ Port works in conjunction with the low frequency transducer to provide accurate low frequency performance.
7. **INPUT PANEL** – Includes input connectors, power connector and user controls.
8. **ENCLOSURE**
9. **PADS** - Pads supplied with each speaker are user-installed.

INPUT PANEL

10. **XLR INPUT** – Connect professional equipment using an XLR connector.
11. **6 mm (¼") INPUT** - Connect equipment using a 6 mm (¼") balanced or unbalanced connector.
12. **INPUT SENSITIVITY SWITCH** – Set this switch to +4 dBu to protect from overload when connecting to professional equipment and sources with very high output.
13. **LOW FREQUENCY TRIM** – Allows boost or attenuation of low frequency output by 2 dB.
14. **HIGH FREQUENCY TRIM** – Allows boost or attenuation of high frequency output by 2 dB.
15. **VOLUME CONTROL** – Use this control to set the maximum listening level.
16. **POWER RECEPTACLE** – Connection for the power cord.
17. **POWER SWITCH** – Activates power for the system.

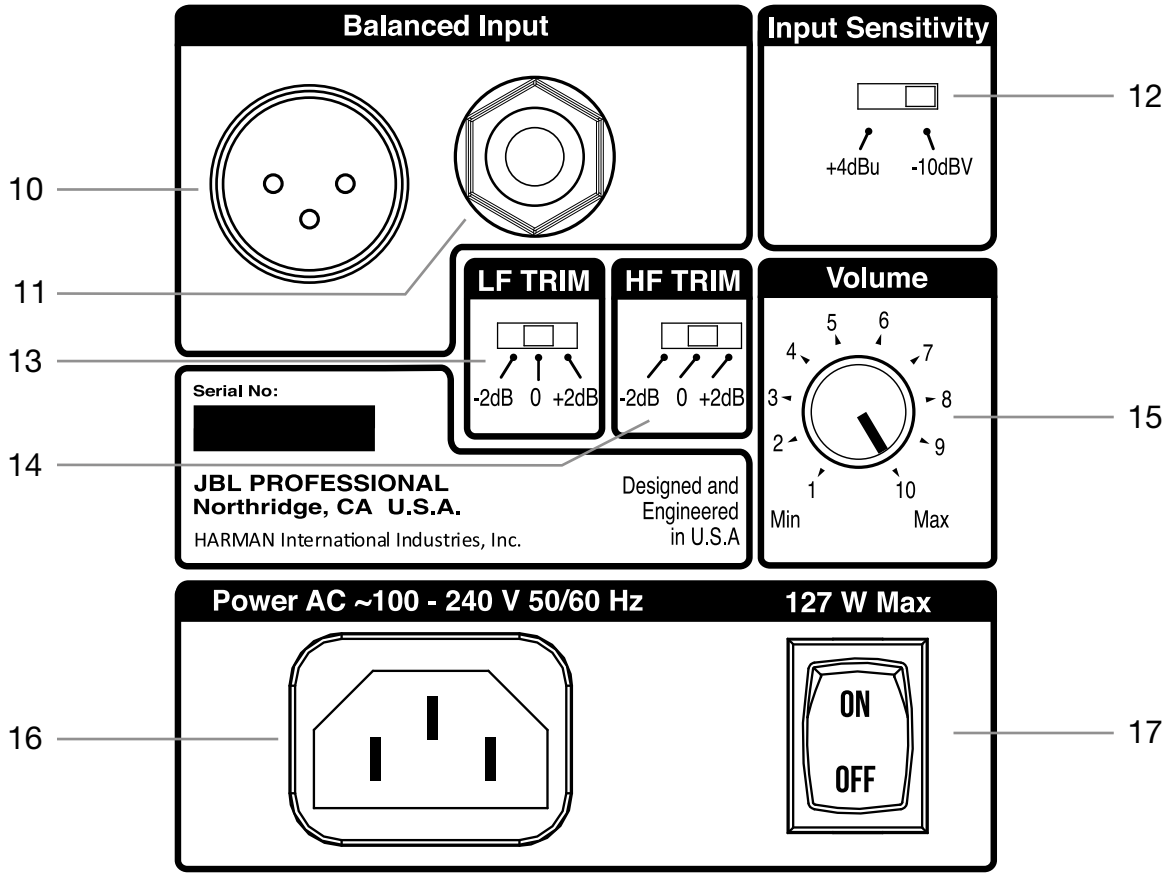

AUDIO CONNECTIONS

Connect signal sources to either the XLR or 6 mm (¼") INPUT CONNECTORS. Connect only a single signal source to the speaker using either XLR INPUT CONNECTOR, OR the 6 mm (¼") TRS INPUT CONNECTOR. Do not connect multiple signal sources to both input connectors simultaneously.

Section 5: LSR310S Powered Studio Subwoofer

Front View

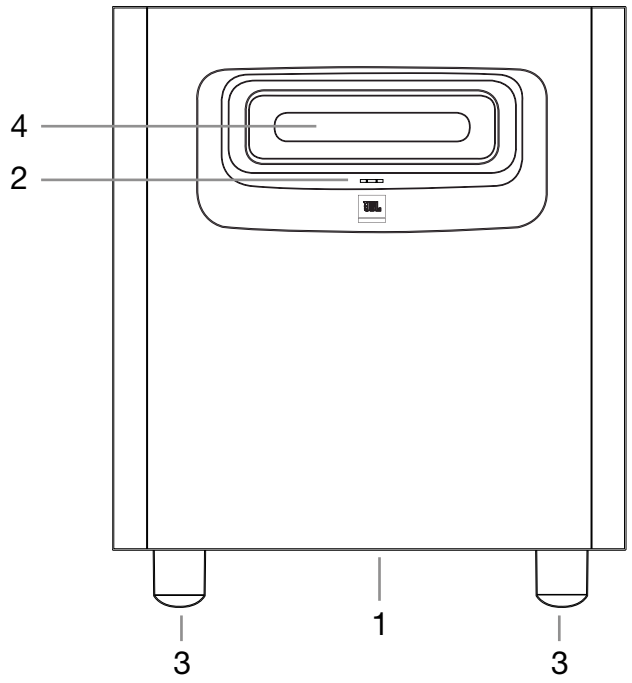

Back View

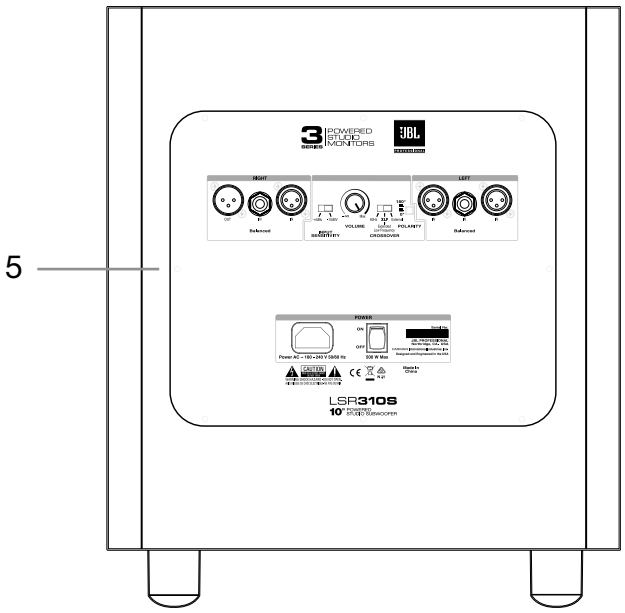

Bottom View

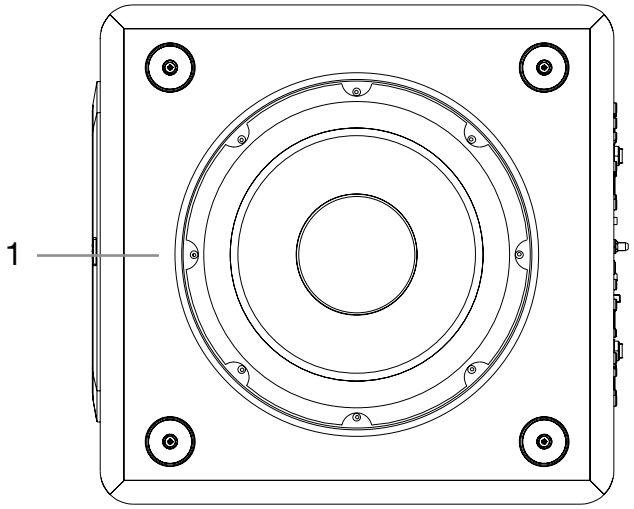

FEATURES

1. **LOW FREQUENCY TRANSDUCER "WOOFER"** – Reproduces low frequency signals.
2. **POWER INDICATOR** – Illuminates when power is connected and the Power Switch is set to ON.
3. **FEET** - Elevate the subwoofer to prevent acoustic coupling with the floor.
4. **LOW FREQUENCY PORT** – Works in conjunction with the low frequency transducer to provide accurate low frequency performance.
5. **INPUT PANEL** - Includes input connectors, power connector and user controls.

INPUT PANEL

6. **RIGHT and LEFT XLR INPUTS**
7. **RIGHT and LEFT 6mm (1/4")**
8. **RIGHT and LEFT XLR OUTPUTS**
9. **INPUT SENSITIVITY switch** – Set this switch to the +4 dBu setting when connecting professional equipment and sources with very high output. **NOTE**: When the LSR310S is used in a system with LSR305 and LSR308, set the INPUT SENSITIVITY switch on the LSR305 or LSR308 to the -10dBV setting regardless of the LSR310S input sensitivity switch setting.
10. **VOLUME CONTROL** – Use this control to balance the volume of the subwoofer with the volume of the speakers in the system.
11. **CROSSOVER FREQUENCY** – **Three settings are provided: 80 Hz, XLF and External** - The 80 Hz setting is recommended for use with the LSR305, LSR308 and any studio monitors. The External setting allows use of an outboard crossover. Select the XLF Extended Low Frequency setting to activate a circuit that emulates the bass tuning commonly applied to playback systems in club environment.
12. **POLARITY** – Enables optional 180 degree reversal of the subwoofer output to optimize the blend of the subwoofer with the main speakers according to relative positions of speakers and the listening position in the room. Select the setting that produces the greatest amount of bass when heard at the listening position.
13. **POWER RECEPTACLE** – Connection for the power cord.
14. **POWER SWITCH** – Activates power for the subwoofer.

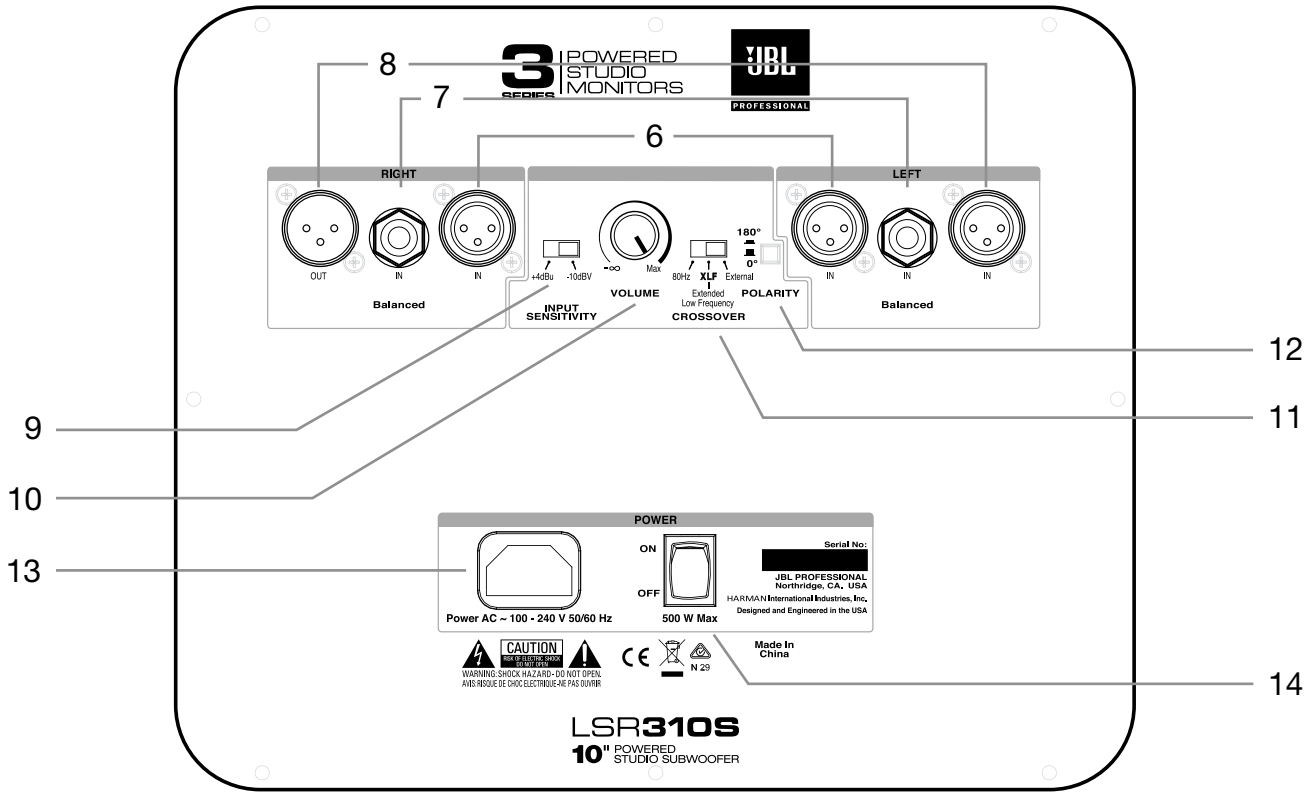

AUDIO CONNECTIONS

Connect signal sources to either the XLR or 6 mm (¼") INPUT CONNECTORS. Connect a single signal source to the speaker using either XLR INPUT CONNECTORs, OR the 6 mm (¼") TRS INPUT CONNECTORs. Do not connect multiple signal sources to the XLR and 6 mm (1/4”) input connectors simultaneously. When using the LSR310S in a Surround Sound System – if the LSR310S Subwoofer is being used to reproduce the .1 LFE channel in a surround sound system, connect the .1 LFE signal to either the LEFT or RIGHT input of the subwoofer.

SETTING THE SUBWOOFER LEVEL

When the LSR310S Subwoofer is used in a system with LSR305 or LSR308 speakers, the ideal balance is achieved when the position of the volume control on the subwoofer is set to the same position as the volume control on the main speakers. Placement of the speakers in the room can affect the amount of bass heard at the listening position.

If more or less subwoofer volume is desired, you may use the volume control on the subwoofer to achieve the balance that works best for your application and taste.

PLACEMENT AND POLARITY SETTING

Because the human ear cannot easily recognize where low frequencies are originating (they are said to be "non-directional"), subwoofer placement is not nearly as critical as main channel speaker positioning. The LSR310S is designed to be placed directly on the floor and not elevated or mounted in any way. Set the POLARITY switch to the setting that yields a stronger perceived bass response at the listening position.

In a stereo system, the subwoofer should optimally be placed between the two main speakers. In a surround sound system, the subwoofer should be placed between the center and left channel speakers or the center and right channel speakers. Precise central placement is not necessary. Centered positioning in the room can sometimes cause unwanted cancellation, so it is recommended that the subwoofer be placed slightly off-center and not at the midpoint between the left and right walls.

CROSSOVER SETTINGS AND "BASS MANAGEMENT"

"Bass management" is a term that refers to the practice of using a subwoofer to reproduce the bass frequencies of the main channels. Because of the physiology of the human ear, low frequencies are largely non-directional. Given an adequate listening distance, we can't easily tell where bass signals are coming from. Thus, it makes little or no difference to the listening experience whether the bass component in a sound comes from the originating speaker (which may be off to your left or right, or even behind you) or from a dedicated subwoofer which is better equipped – and better positioned in the room – to reproduce low frequencies than even a full-range monitor. For that reason, you may want to use an LSR310S subwoofer to reproduce all the bass frequencies in your system. If you are using an LSR310S Subwoofer in your system, bass management is accomplished simply by routing your Left and Right mix channels to the Subwoofer inputs and then from the subwoofer outputs to the Left and Right speakers. The frequency at which the subwoofer divides signals to the sub and the left and right speakers can be set using the Crossover Frequency selector switch on the input panel of the LSR310S Subwoofer. The 80Hz filter setting is recommended when the goal is a full range reference monitor system that accurately portrays content below the cut-off of the main speakers. The 80 Hz crossover provides a smooth transition and between the subwoofer and the main speakers, while optimizing the blend of low frequency in the system, without audible localization of bass, creating the perception of a full range system with no subwoofer.

To produce a smooth transition between the speakers and the subwoofer and the goal is an accurate representation of frequency response in the program material. Two additional settings are provided: XLF and External.

XLF

A trend in music production is the requirement for enhanced low frequency response in the control room. Artists and producers involved in the production of dance music appreciate the ability to audition their work as it might sound when played on a system with enhanced low frequency tuning, commonly employed in dance clubs. A JBL first, the LSR310S includes a special XLF Extended Low Frequency setting that emulates the response curve applied to a club playback system. When the XLF crossover setting is selected, a 120Hz High Pass Filter is engaged in conjunction with a 10 dB boost at 60Hz with a bandwidth of 0.5 octaves. Using this setting, the bass output more than doubles and the character of low frequency approximates that of a club system. Continuous low frequency with very high peak SPL is made possible by JBL's new long excursion low frequency driver working in concert with JBL's patented Slip Stream™ Port design, and powered by a 200 Watt class D amplifier. A protective circuit allows the 310S to continuously produce low frequency at high output without failure. In situations where positioning will allow, an additional 6 dB of output can be achieved by positioning the LSR310S subwoofer adjacent to a wall or at the intersection of two walls.

External
Select this setting when connecting the subwoofer to an external bass management system. When external is selected, XLR left and right outputs are disabled.

SURROUND SOUND SYSTEMS AND LFE

The LSR310S Subwoofer can be used to reproduce the LFE (Low Frequency Effects) or .1 channel in a surround sound system. In film production applications, the LFE channel contains low frequency effects, such as the sounds of explosions, and other sounds with a strong low frequency component. In music applications, the LFE channel usually contains low frequency instruments such as bass, bass drum, and synthesizer elements.

TWO CHANNEL SYSTEMS

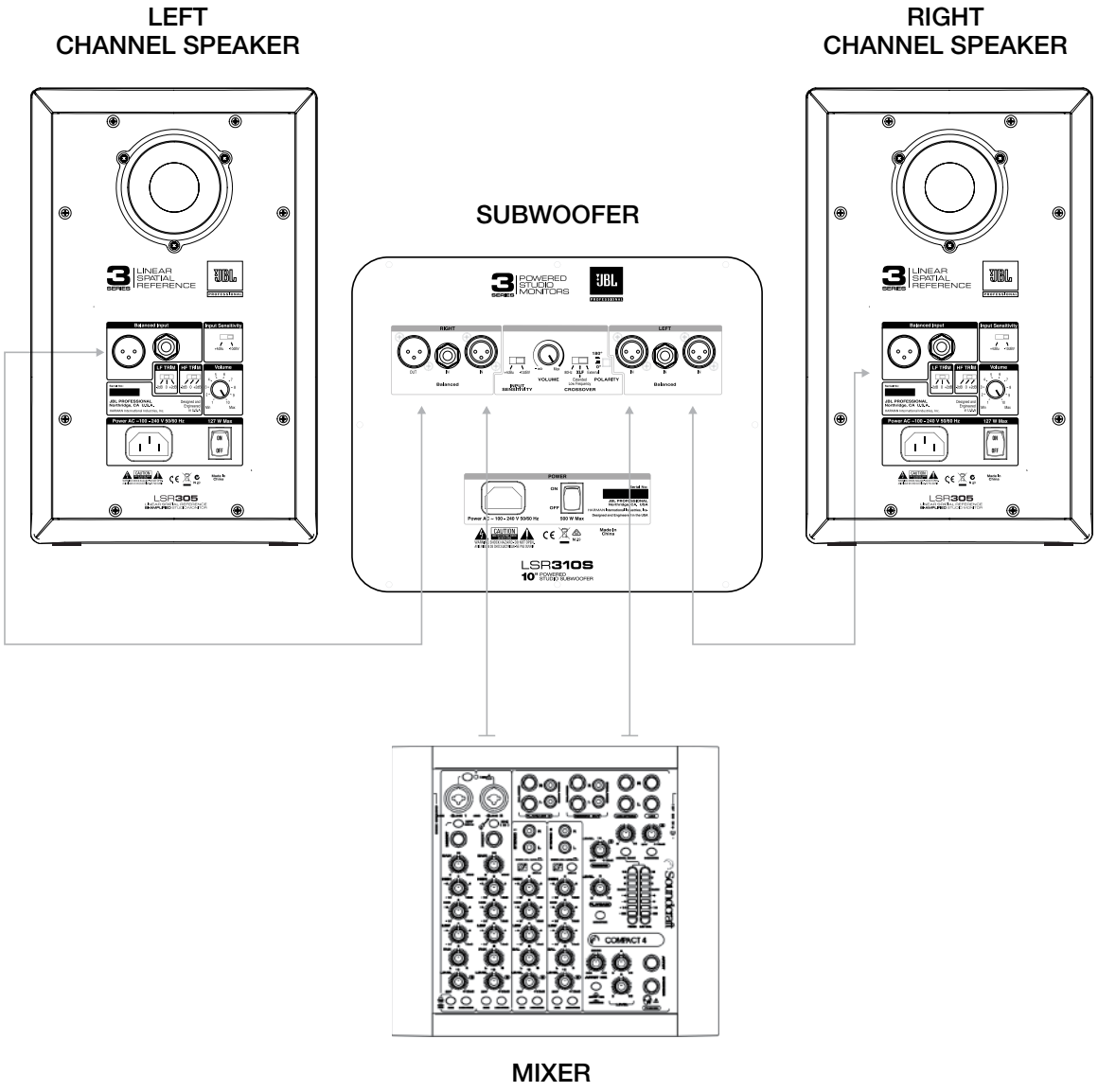

SURROUND SOUND SYSTEMS

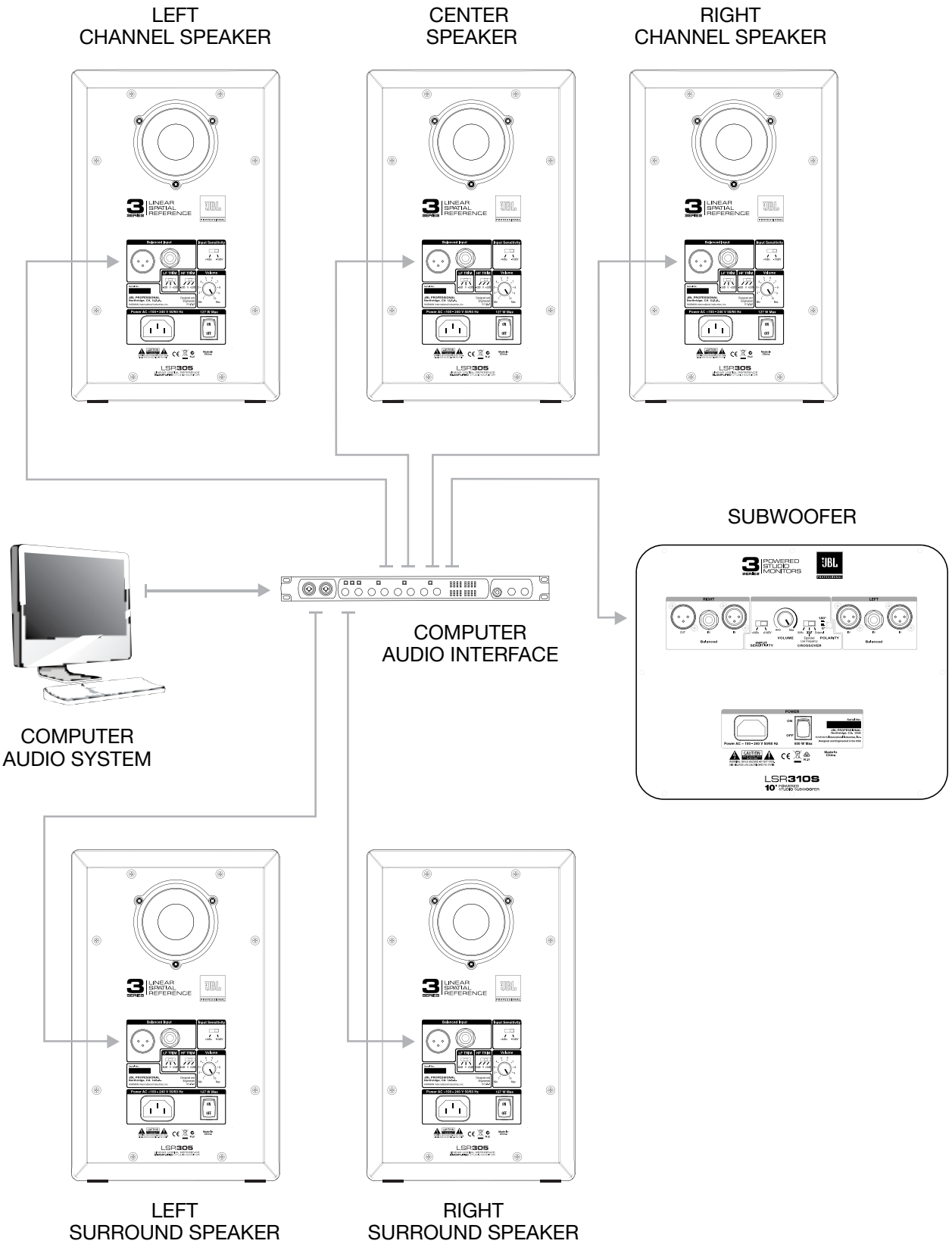

TROUBLE SHOOTING

If there is no sound from your speakers, check these settings:

- Make sure a signal source is connected and producing sound.
- Make sure the POWER INDICATOR is illuminated on the front of the speaker.
- Make sure the VOLUME CONTROL is not set to the full counter-clockwise minimum position.
- Confirm the power cable is connected and the POWER SWITCH is set to the ON position.

If the above measures do not correct the problem, please contact JBL Professional Customer Service.

Specifications

	LSR305	LSR308	LSR310S
Frequency Range:	43 Hz – 24 kHz	37 Hz - 24 kHz	27 Hz
Crossover:	1725 Hz 4th order acoustic Linkwitz-Riley	1800 Hz 4th order acoustic Linkwitz-Riley	- - -
Maximum Peak SPL:	108 dB SPL *	112 dB SPL *	113 dB **
Maximum Peak Input Level: -10 dBV / +4 dBu	+6 dBV / +20.3 dBu	+6 dBV / +20.3 dBu	+6 dBV / +20.3 dBu
Input Connectors:	1 x XLR, 1 x TRS Balanced	1 x XLR, 1 x TRS Balanced	2 x XLR, 2 x TRS Balanced
Input Sensitivity: (-10 dBV input)	92 dB / 1m	92 dB / 1m	92 dB / 1m
HF Driver Size:	25 mm (1")	25 mm (1")	- - -
LF Driver Size:	127 mm (5")	203 mm (8")	250 mm (10")
HF Driver Power Amp:	41 W Class D	56W Class D	- - -
LF Driver Power Amp:	41 W Class D	56W Class D	200W Class D
HF Trim Control:	+2 dB, 0, -2 dB @ 4.4 kHz	+2 dB, 0, -2 dB @ 4.4 kHz	- - -
LF Trim Control:	+2 dB, 0, -2 dB @ 115 Hz	+2 dB, 0, -2 dB @ 115 Hz	- - -
AC Input Voltage:	100-240 VAC +/- 10% 50/60 Hz	100-240 VAC +/- 10% 50/60 Hz	100-240 VAC +/- 10% 50/60 Hz
Enclosure Construction:	15 mm (5/8 in) MDF	15 mm (5/8 in) MDF	18 mm (3/4 in) MDF
Enclosure Finish:	Matte Black PVC	Matte Black PVC	Matte Black PVC
Baffle Construction:	Injection-molded structural ABS	Injection-molded structural ABS	- - -
Baffle Finish:	Metallic Black Acrylic Paint	Metallic Black Acrylic Paint	- - -
Dimensions (H x W x D):	298 mm x 185 mm x 231 mm (11.75 in x 7.28 in x 9.88 in)	419 mm x 254 mm x 308 mm (16.5 in x 10.0 in x 12.1 in)	448 mm x 381 mm x 398 mm (17.65 in x 15.0 in x 15.65 in)
Weight:	4.6 kg (10.12 lbs)	8.6 kg (18.9 lbs)	15.6 kg (34.3 lbs)
Display Carton (H x W x D):	354 mm x 244 mm x 299 mm (13.93 in x 9.6 in x 11.77 in)	473 mm x 312 mm x 358 mm (18.6 in x 12.2 in x 14.0 in)	505 mm x 466 mm x 476 mm (19.9 in x 18.3 in x 18.7 in)
Shipping Carton (H x W x D):	373 mm x 260 mm x 315 mm (14.69 in x 10.22 in x 12.4 in)	491mm x 326 mm x 371 mm (19.3 in x 12.8 in x 14.6 in)	520 mm x 478 mm x 488 mm (20.5 in x 18.8 in x 19.2 in)
Shipping Weight:	6 kg (13.2 lbs)	10 kg (22 lbs)	19.1 kg (42 lbs)

* Full Bandwidth Pink Noise Measured C-Weighted
** Measured in Half Space

Section 9: JBL Service Contact Information

MAILING ADDRESS:
JBL Professional
8500 Balboa Blvd.
Northridge, CA 91329

SHIPPING ADDRESS:
JBL Professional
8500 Balboa Blvd., Dock 15
Northridge, CA 91329
(Do not return product to this address without first obtaining prior authorization from JBL)

CUSTOMER SERVICE:
Monday through Friday
8:00am - 5:00pm
Pacific Coast Time in the U.S.A.
(800) 8JBLPRO (800.852.5776)
www.jblproservice.com

PRODUCT REGISTRATION:
Register your product online at www.jblpro.com/registration

On The World Wide Web:
www.jblpro.com

PROFESSIONAL CONTACTS, OUTSIDE THE USA:
Contact the JBL Professional Distributor in your area. A complete list of JBL Professional international distributors is provided at our U.S.A. website: www.jblpro.com

EN DEHORS DES ETATS-UNIS:
Contacter votre Distributeur JBL Professional. Une liste complète de nos distributeurs internationaux est disponible sur le site web - www.jblpro.com

INTERNATIONAL:
Wenden Sie sich an Ihre örtliche JBL Professional Vertretung. Eine vollständige Liste der internationalen JBL-Vertretungen finden Sie auf unserer Website unter www.jblpro.com

FUERA DE LOS ESTADOS UNIDOS:
Comuníquese con el distribuidor de JBL Professional de su zona. En nuestro sitio web, www.jblpro.com, encontrará una lista completa de los distribuidores de JBL International.

Section 10: Product Warranty Information

The JBL Limited Warranty on professional loudspeaker products (except for enclosures) remains in effect for five years from the date of the first consumer purchase. JBL amplifiers are warranted for three years from the date of original purchase. Enclosures and all other JBL products are warranted for two years from the date of original purchase.

WHO IS PROTECTED BY THIS WARRANTY?

Your JBL Warranty protects the original owner and all subsequent owners so long as: A.) Your JBL product has been purchased in the Continental United States, Hawaii or Alaska. (This Warranty does not apply to JBL products purchased elsewhere except for purchases by military outlets. Other purchasers should contact the local JBL distributor for warranty information.); and B.) The original dated bill of sale is presented whenever warranty service is required.

WHAT DOES THE JBL WARRANTY COVER?

Except as specified below, your JBL Warranty covers all defects in material and workmanship. The following are not covered: Damage caused by accident, misuse, abuse, product modification or neglect; damage occurring during shipment; damage resulting from failure to follow instructions contained in your Instruction Manual; damage resulting from the performance of repairs by someone not authorized by JBL; claims based upon any misrepresentations by the seller; any JBL product on which the serial number has been defaced, modified or removed.

WHO PAYS FOR WHAT?

JBL will pay all labor and material expenses for all repairs covered by this warranty. Please be sure to save the original shipping cartons because a charge will be made if replacement cartons are requested. Payment of shipping charges is discussed in the next section of this warranty.

HOW TO OBTAIN WARRANTY PERFORMANCE

If your JBL product ever needs service, write or telephone us at JBL Incorporated (Attn: Customer Service Department), 8500 Balboa Boulevard, PO. Box 2200, Northridge, California 91329 (818/893-8411). We may direct you to an authorized JBL Service Agency or ask you to send your unit to the factory for repair. Either way, you'll need to present the original bill of sale to establish the date of purchase. Please do not ship your JBL product to the factory without prior authorization. If transportation of your JBL product presents any unusual difficulties, please advise us and we may make special arrangements with you. Otherwise, you are responsible for transporting your product for repair or arranging for its transportation and for payment of any initial shipping charges. However, we will pay the return shipping charges if repairs are covered by the warranty.

LIMITATION OF IMPLIED WARRANTIES

ALL IMPLIED WARRANTIES, INCLUDING WARRANTIES OF MERCHANTABILITY AND FITNESS FOR PARTICULAR PURPOSE, ARE LIMITED IN DURATION TO THE LENGTH OF THIS WARRANTY.

EXCLUSION OF CERTAIN DAMAGES

JBL'S LIABILITY IS LIMITED TO THE REPAIR OR REPLACEMENT, AT OUR OPTION, OF ANY DEFECTIVE PRODUCT AND SHALL NOT INCLUDE INCIDENTAL OR CONSEQUENTIAL DAMAGES OF ANY KIND. SOME STATES DO NOT ALLOW LIMITATIONS ON HOW LONG AN IMPLIED WARRANTY LASTS AND/OR DO NOT ALLOW THE EXCLUSION OF INCIDENTAL OR CONSEQUENTIAL DAMAGES, SO THE ABOVE LIMITATIONS AND EXCLUSIONS MAY NOT APPLY TO YOU. THIS WARRANTY GIVES YOU SPECIFIC LEGAL RIGHTS, AND YOU MAY ALSO HAVE OTHER RIGHTS, WHICH VARY, FROM STATE TO STATE.

JBL Professional
8500 Balboa Boulevard
Northridge, CA 91329 USA
Visit us online at www.jblpro.com

Hear the truth.

JBL PROFESSIONAL by HARMAN

Part Number:
Rev 5041835A